SEASTAR JACKPLATE

SEASTAR XTREME JACKPLATES

APPLICATIONS

The SeaStar Xtreme Jackplate is rated for 400 horsepower engines and is designed to maximize engine tilt when used with SeaStar steering cylinders.

FEATURES

- Xtreme jackplate is using high strength materials and is easily capable of handling up 400 horsepower engines.
- Rapid hydraulic response in 8.5 seconds.
- Complete rigid engine support at full thrust.
- Easily moves engine up or down at full thrust.
- Smooth operation with composite bushings
- Easy wrench access to engine bolts from the side
- Compatible with Power Pole® and Talon®.

NOTES:

* NOTE: JP5040X requires adapter kit DK4600 for Power Pole® or Talon® anchor systems mounting.

*** Included with Jackplate harness.*

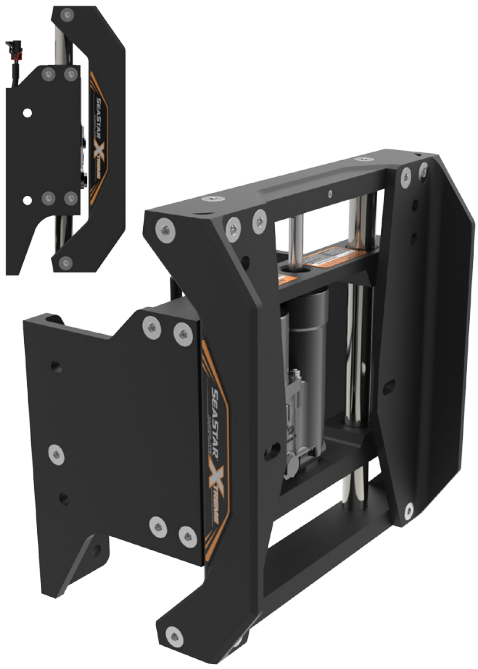

The SeaStar Xtreme Jackplate is one of the sleekest and most durable engine Jackplates available. This essential performance accessory allows for higher speed, gains in fuel economy and the ability to run in shallow water. The all new SeaStar Xtreme Jackplate features sleek, bold styling that is redefining the look for Jackplates.

Available in 4, 6, 8,10 and 12 inch setbacks, it also has a new, high-speed, hydraulic actuator that lifts engines 5.8” in 8.5 seconds. The SeaStar Xtreme Jackplate is rated for 400 horsepower engines and is designed to maximize engine tilt when used with SeaStar steering cylinders.

ORDER INFORMATION

HYDRAULIC PLATES	PART No.
4” Setback	JP5040X*
6” Setback	JP5060X
8” Setback	JP5080X
10” Setback	JP5100X
12” Setback	JP5120X

ACCESSORIES	PART No.
Basic Rocker Switch	DK4020**
Pro Trim Single Function	PT1000-1P
Pro Trim Dual Function	PT2000-1P
SmartStick and Gauge Kit	DK4220
Gauge and Harness Kit	DK4320
Accessory Adapter	DK4600

ACCESSORIES	PART No.
Hole Shot Plate Kit, 6”	HSK5060
Hole Shot Plate Kit, 8”	HSK5080
Hole Shot Plate Kit, 10”	HSK5100
Hole Shot Plate Kit, 12”	HSK5120
Jackplate Relay	DK3010
Jackplate Wire Harness	DK4420
Actuator Kit, 3/8” Mount Bolt, 5/16” socket	DK4710
Actuator Kit, 7/16” Mount Bolt, 3/8” socket	DK4720
SeaStar Stabilizer Clips, (pack of 2)	HYCL-001
Transom Plate, Small, 2” x 15”	18-79987
Transom Plate, Large, 4” x 17”	18-79988

Issue Date - Nov 2017
Issue Number - jp3

SEASTAR JACKPLATE

SEASTAR XTREME JACKPLATES

FEATURES

- High output integrated actuator to lift and lower engines in all conditions.
- Rated for 400hp engines.
- Environmentally sealed non-contact SmartStick position sensor kit available for precise height information.
- Complete rigid engine support at full thrust.
- Easily moves engine at full thrust.
- Designed to maximize engine tilt with SeaStar steering cylinders.
- High visibility lift scale for quick glance operation.
- Integrated circuit breaker gives electrical protection right at the battery post.
- All hydraulic Jackplates come with basic rocker switch DK4020.

TECHNICAL DATA

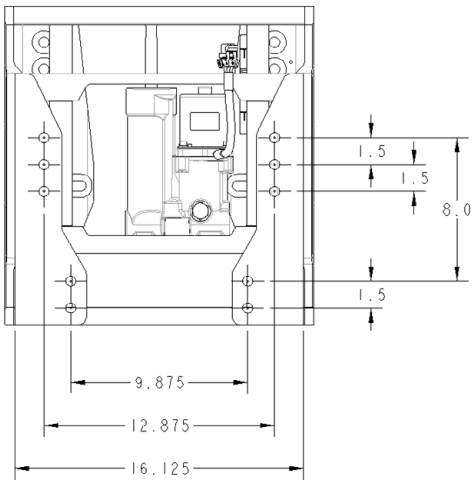

JP5120X

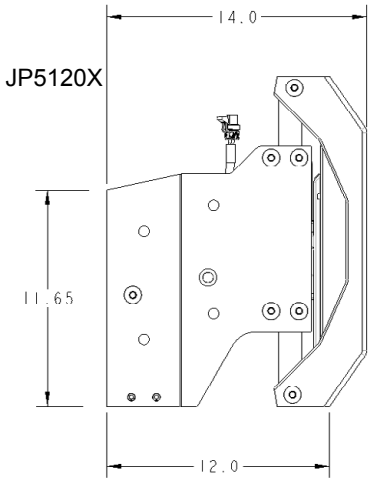

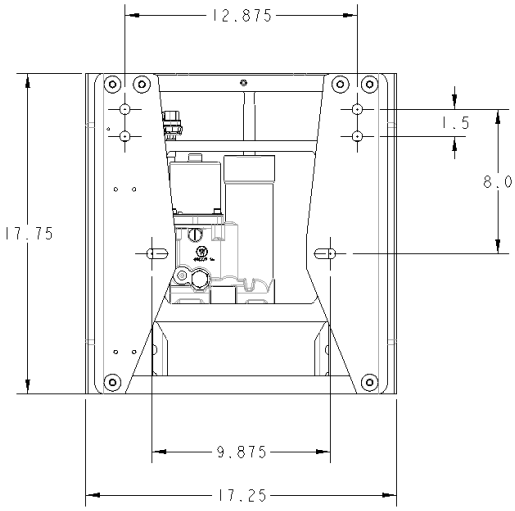

JP5100X

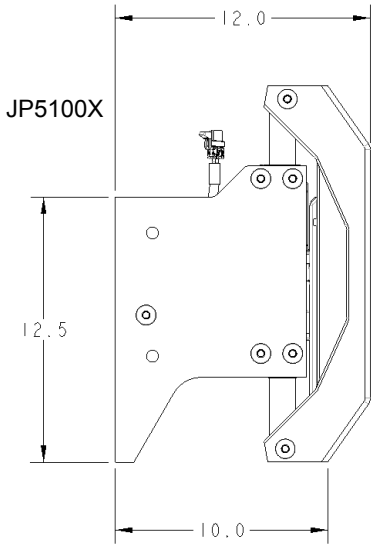

JP5040X

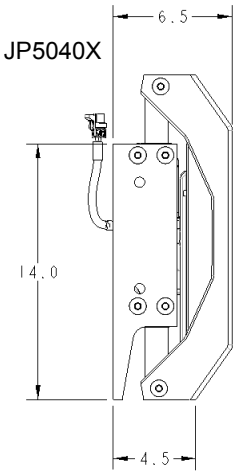

JP5060X

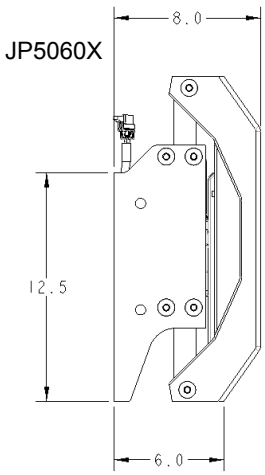

JP5080X

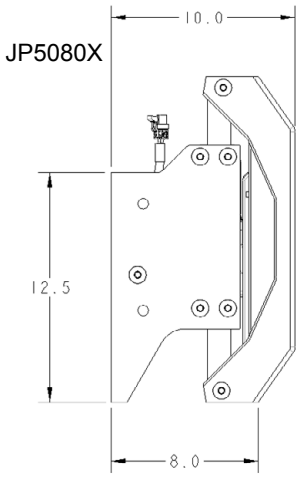

Issue Date - Nov 2017
Issue Number - jp3