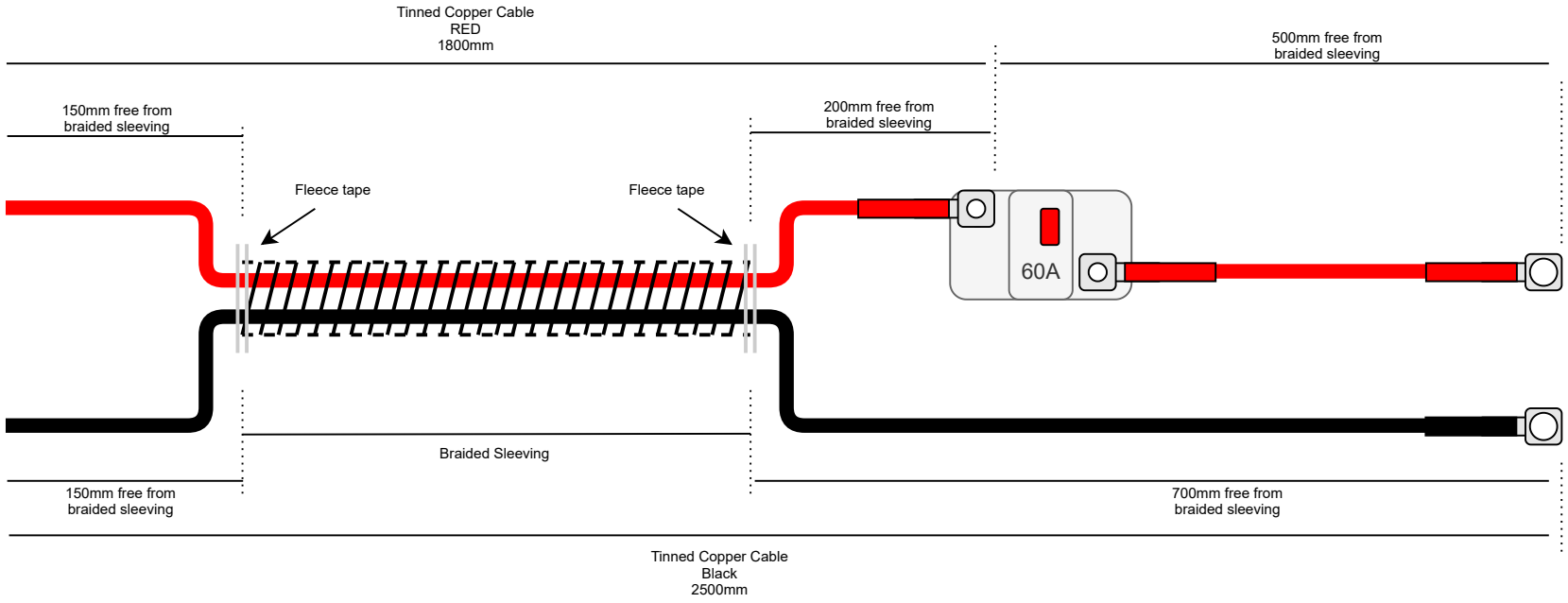
Tinned Copper Cable
RED
1800mm
500mm free from
braided sleeving
150mm free from
braided sleeving
200mm free from
braided sleeving
Fleece tape
Fleece tape
60A
Braided Sleeving
150mm free from
braided sleeving
700mm free from
braided sleeving
Tinned Copper Cable
Black
2500mm

COMSTEDT®