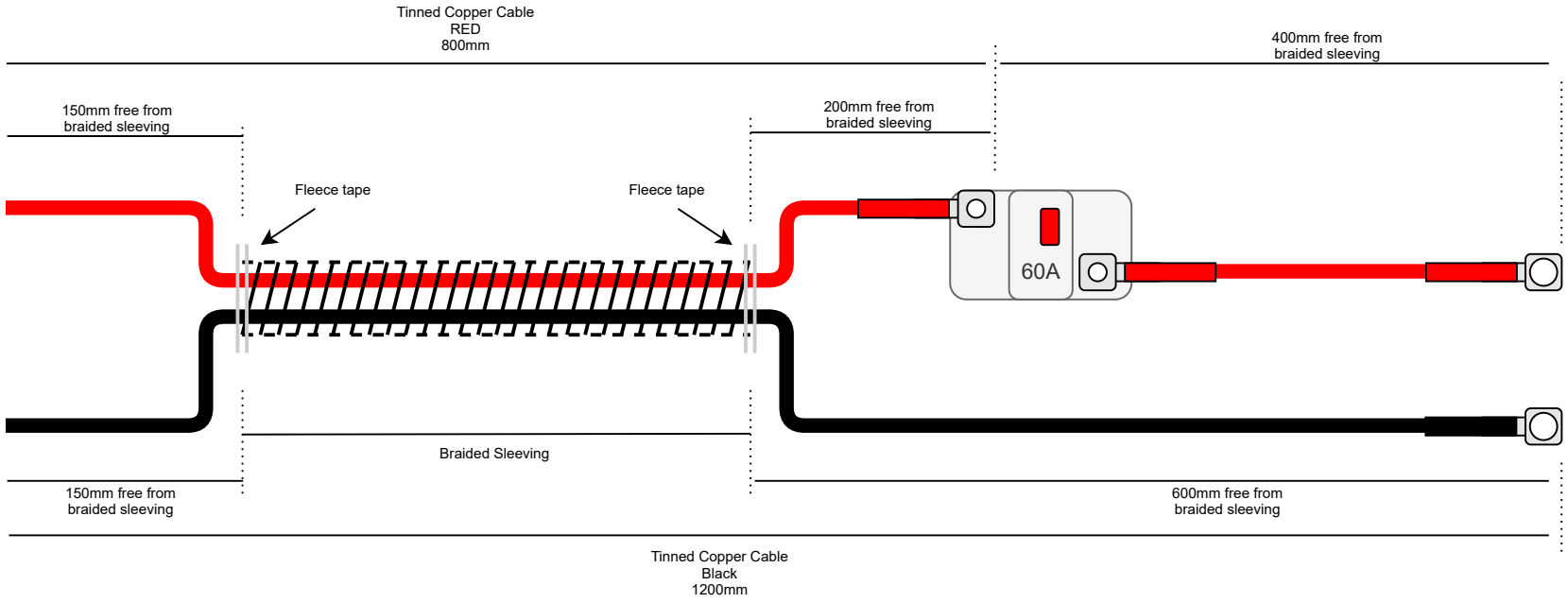
Tinned Copper Cable
RED
800mm
400mm free from
braided sleeving
150mm free from
braided sleeving
200mm free from
braided sleeving
Fleece tape
Fleece tape
60A
Braided Sleeving
150mm free from
braided sleeving
600mm free from
braided sleeving
Tinned Copper Cable
Black
1200mm

COMSTEDT®