JBS™ JET BOAT STEERING

APPLICATIONS

SeaStar Solutions JBS is recommended for use in all jet boat applications powered by Mercury® Sport Jet or OMC® Turbo Jet drives up to 175 HP.

FEATURES

- Ultra compact helm
- 135º or 270º turning arc lock-to-lock
- 90º straight or 180º cable entry options allow for alternate cable routing
- Standard 3/4" tapered steering shaft
- Uses SSC219XX steering cable available in 1ft increments
- SSC219 cable measures from end to end
- Tilt helm available
- Built-in steering stops prevent additional cable stress in hard over positions
- Easy to install
- Stainless steel cable output end

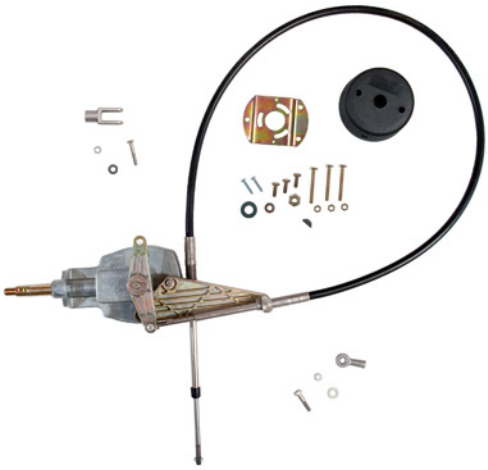

Designed exclusively for Jet boats featuring a choice of two steering arc angles 135º or 270º lock to lock, a special steering cable (not a control cable) plus an assortment of mounting options for virtually any boat!

NOTE - Can not be used on outboards with jet lower units.

ORDER INFORMATION

This steering system is sold by components. Select helm, bezel and cable or Tilt helm, and cable from items listed below. Note engine type and desired steering arc.

COMPONENTS	PART No.
135º Jet boat helm	SH5087P
270º Jet boat helm	SH5088P
JBS Bezel and Mounting Hardware Kit	SB39452P
Steering cable (XX = length in feet; measurement is length from tip to tip)	SSC219XX
Nozzle connection kit (Mercury)	SA27591P
Nozzle connection kit (OMC)	SA27590P
OPTIONS	
135º Jet boat tilt helm (includes tilt mechanism)	SH91691*
270º Jet boat tilt helm (includes tilt mechanism)	SH91692*
SERVICE ITEMS	
Steering Wheel Hardware Kit	SA27454P

Issue Date - Sept 2013
Issue Number - ms5

JBS™ JET BOAT STEERING

NOTES

If you are replacing a jet boat steering cable, you must determine the part number of the existing steering cable. SSC219 cables are ONLY for JBS systems shown on this page.

SERVICE ITEMS	
Helm Parts (see diagram below)	
1. Pivot – cable conduit fitting	3941615
2. Bushing for cable cond. ftg. pivot	3604811
3. Pivot – cable terminal end	3941117
4. Bushing for cable term. end pivot	3828412
Helm Cable Bracket Hardware Kit 5. Locknut (3/8-24) – conduit fitting pivot 6. Lock Washer for 3/8-24 Locknut 7. Locknut (1/4-20) – cable terminal end pivot 8. Lock Washer for 1/4-20 Locknut 9. 3 Hex Bolts (anti-vibratory patch) – bracket	3941117

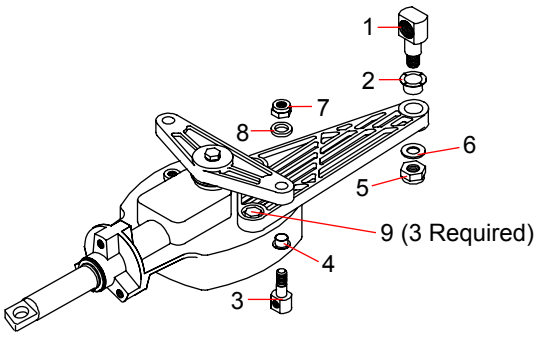

TYPICAL JBS MOUNTING / CABLE ROUTING

(Steering Wheel not included.)

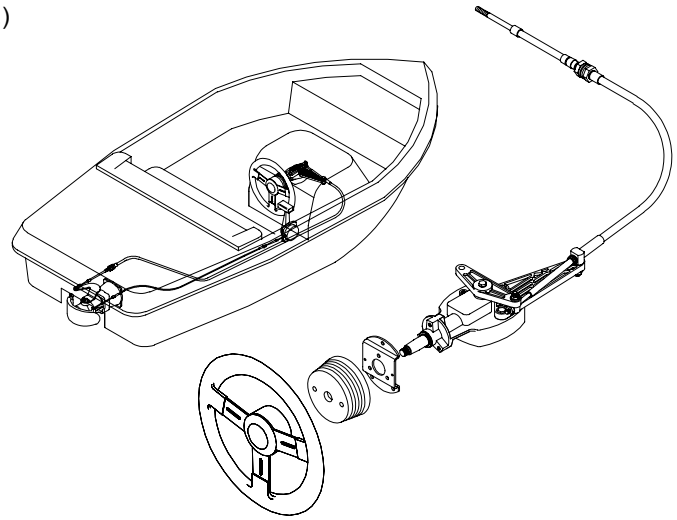

Issue Date - Sept 2013
Issue Number - ms5