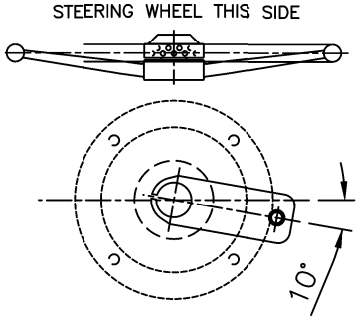

89000002 – OUTPUT LEVER – 10° STBD OFFSET (LOOKING FROM UNDERDECK)

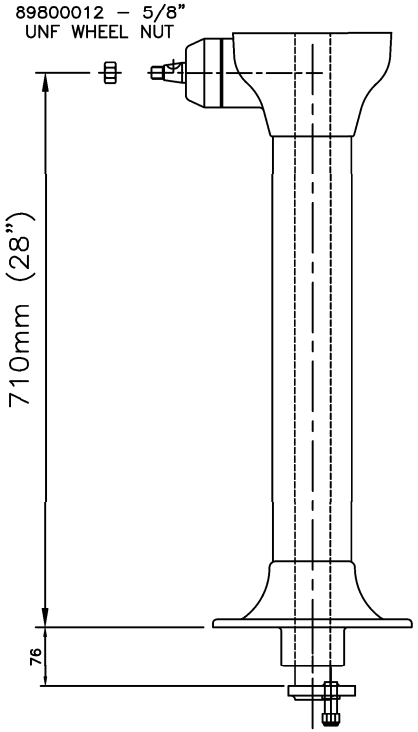

SPECIFIC NOTES:–

1. ISO METRIC THREADS TO BS3643 6H/6g
2. UNIFIED THREADS TO BS1580 CLASS 2A/2B
3. WOODRUFF KEY SLOTS TO BS4235 PART 2
4. CIRCLIP GROOVES TO BS3673 PART4

PRODUCTION NOTES:–

n1.
n2.
n3.
n4.

COPYRIGHT:–

THE DRAWING AND ALL THE INFORMATION PROVIDED ARE PROPERTY OF LEWMAR LTD AND CANNOT BE REPRODUCED, TRANSFERED OR MODIFIED WITHOUT PERMISSION. COPYRIGHT LEWMAR LTD.

GENERAL NOTES:–

1. ALL DIMENSIONS IN MM UNLESS STATED OTHERWISE
2. GENERAL TOLERANCE OF ±0.2mm UNLESS STATED OTHERWISE
3. REMOVE ALL BURRS AND SHARP EDGES
4. GENERAL TOLERANCE OF +0.1/–0.0 FOR DRILL HOLES UNLESS STATED OTHERWISE
5. ALL ANGULAR DIMENSIONS TO BE ±0.5° UNLESS OTHERWISE SPECIFIED
6. M4 BOLTS TO BE TIGHTENED TO 2.5Nm ±0.5Nm
7. M5 BOLTS TO BE TIGHTENED TO 5.0Nm ±1.0Nm
8. M8 BOLTS TO BE TIGHTENED TO 9.0Nm ±1.0Nm
9. M8 BOLTS TO BE TIGHTENED TO 21.0Nm ±2.0Nm
10. M10 BOLTS TO BE TIGHTENED TO 43.0Nm ±3.0Nm

DATE CHANGED	ISS	CHANGE DESC.	BY
20/01/06	A	ISSUE PROD	KO

MATERIAL:–

X
X
X

PROJECTION:–

SCALE:– 1:4 @ A3
DRAWN:– KAT O
DATE:– 20/01/2006
SHEET:– 1 OF 1
CHECK'D:–

TITLE:–

COBRA CRUISING CLASSIC PEDESTAL WITH FRICTION BRAKE

LEWMAR

DWG NO:– 89900030 REV A

LOCTITE & GREASE USED:–

82100114 – GREASE WPG FNA
82000317 – LOCTITE ACTIVATOR T 7471
82000318 – LOCTITE 601 RETAINING COMPOUND
82000320 – LOCTITE ADHESIVE 480 20 GM

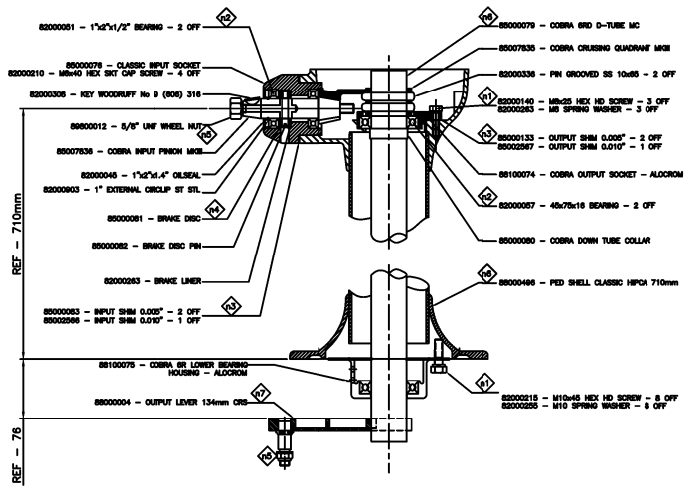

PRODUCTION NOTES:–

n1. USE LOCTITE 601 ON SCREWS
n2. USE LOCTITE 7471 & 601 ON BEARINGS
n3. QUANITIES OF SHIMS MAY VARIES DEPENDS ON MESHING OF BEVEL GEARS
n4. USE LOCTITE ADHESIVE 480 20 GM
n5. DO NOT TIGHTEN NUT – FINGER TIGHT ONLY
n6. COLLAR & DOWN TUBE WELD BEFORE ASSEMBLY
n7. OUTPUT LEVER WELD AFTER ASSEMBLY

TITLE:–

COBRA CRUISING CLASSIC PEDESTAL WITH FRICTION BRAKE

COPYRIGHT:–

THE DRAWING AND ALL THE INFORMATION PROVIDED ARE PROPERTY OF LEWMAR LTD AND CANNOT BE REPRODUCED, TRANSFERED OR MODIFIED WITHOUT PERMISSION. COPYRIGHT LEWMAR LTD.

GENERAL NOTES:–

1. ALL DIMENSIONS IN MM UNLESS STATED OTHERWISE
2. GENERAL TOLERANCE OF ±0.2mm UNLESS STATED OTHERWISE
3. REMOVE ALL BURRS AND SHARP EDGES
4. GENERAL TOLERANCE OF +0.1/–0.0 FOR DRILL HOLES UNLESS STATED OTHERWISE
5. ALL ANGULAR DIMENSIONS TO BE ±0.5° UNLESS OTHERWISE SPECIFIED
6. M4 BOLTS TO BE TIGHTENED TO 2.5Nm ±0.5Nm
7. M5 BOLTS TO BE TIGHTENED TO 5.0Nm ±1.0Nm
8. M8 BOLTS TO BE TIGHTENED TO 9.0Nm ±1.0Nm
9. M8 BOLTS TO BE TIGHTENED TO 21.0Nm ±2.0Nm
10. M10 BOLTS TO BE TIGHTENED TO 43.0Nm ±3.0Nm

DATE CHANGED	ISS	CHANGE DESC.	BY
20/01/06	A	FIRST ISSUE	KO

MATERIAL:–

SEE PARTS LIST

PROJECTION:–

SCALE:– 1:3 @ A3
DRAWN:– VAI L
DATE:– 11/01/2006
SHEET:– 1 OF 1
CHECK'D:–

LEWMAR

DWG NO:– 89900030 REV A