PLEASE NOTE: NOT ALL ROLLERS HAVE BEEN ILLUSTRATED

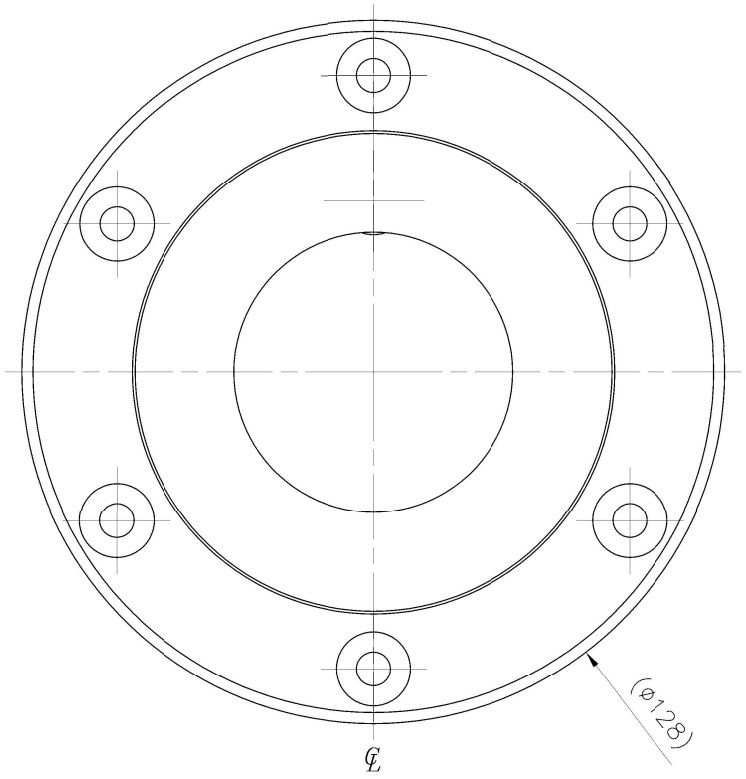

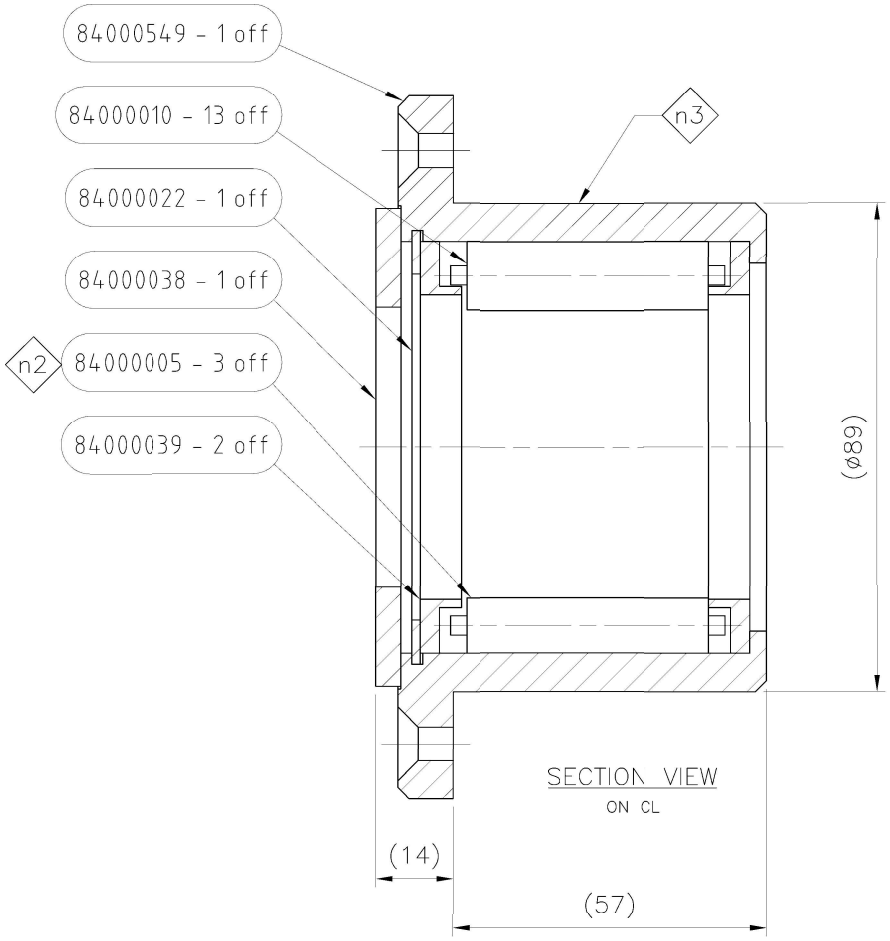

COPYRIGHT:–

THE DRAWING AND ALL THE INFORMATION PROVIDED ARE PROPERTY OF LEWMAR LTD AND CANNOT BE REPRODUCED, TRANSFERED OR MODIFIED WITHOUT PERMISSION. COPYRIGHT LEWMAR LTD.

GENERAL NOTES:–

1. ALL DIMENSIONS IN BRACKETS () ARE FOR REFERENCE ONLY. ALL DIMENSIONS ARE IN MM UNLESS STATED OTHERWISE

2. M4 BOLTS TO BE TIGHTENED TO 2.5Nm ±0.5Nm

3. M5 BOLTS TO BE TIGHTENED TO 5.0Nm ±1.0Nm

4. M6 BOLTS TO BE TIGHTENED TO 9.0Nm ±1.0Nm

5. M8 BOLTS TO BE TIGHTENED TO 21.0Nm ±2.0Nm

6. M10 BOLTS TO BE TIGHTENED TO 43.0Nm ±3.0Nm

PRODUCTION NOTES:–

n1. CLEAN ALL PARTS PRIOR TO ASSEMBLY

n.2 IF REQUIRED – FILLER ROLLERS MUST BE POSITIONED DIAMETRICALLY OPPOSITE EACH OTHER

IF ROLLER NUMBERS REQUIRED DIFFER FROM THIS DRAWING PLEASE INFORM ENGINEERING.

n3. ON COMPLETION OF ASSEMBLY APPLY METALISED LABEL 82001209

DATE CHANGED	ISS	CHANGE DESC.	BY
21/06/07	A	ISSUE PROD	DU
21/06/07	B	MOD 11528	DU

ORTHOGRAPHIC PROJECTION:

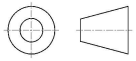

SCALE:–	1:1 @ A3
DRAWN:–	DOUG
DATE:–	21/06/2007
SHEET:–	1 OF 1
CHECK'D:–	

TITLE:–

ø50 UPPER RUDDER BEARING ASSEMBLY DETAILS

LEWMAR

LEWMAR STEERING DIVISION
UNIT 1, BLOCK B, PORTENWAY, LAPORTE WAY, LUTON, BEDFORDSHIRE, UK. LU4 8EF
TEL: +44(0) 1582 404400 FAX: +44(0) 1582 400331
EMAIL: DESIGN@WHITLOCKSTEERING.COM

DWG NO: 89600170

ISSUE: B